A Stochastic Gesture Based Intelligent Navigation System

D. Albert Bush, V. Keerthi Ram, G. Nandha Kumar, A. Mathan Gopi, Dr. Rajini Girinath
Department of Computer Science and Engineering, Sri Muthukumaran Institute of Technology, Chennai, India.

Abstract- Wheeled mobility devices such as wheelchairs are used by people who are not able to walk due to physical illness or inability to move on their own. Today's modern technology allows sophisticated use of wheelchairs like automated or manual transmissions and even wireless communication between the user and the smart device. This paper is to describe an intelligent wheelchair controlled using a smartphone's voice and gesture recognition algorithms, and the sensors used are, two IR sensors, one GPS sensor and one Accelerometer sensor. The IR sensor is used for obstacle detection. The Accelerometer sensor is used for fall detection. The system makes the user to vigorously interact with the wheelchair at different modules of control and sensing.

Index Terms - Android phone, PIC micro-controller, Gesture recognition, Voice recognition, IR sensor, Bluetooth module, H-bridge, MEMS accelerometer.

1. INTRODUCTION

The World Health Organization (WHO) presented a statistical Report on disability [1] which confirms that over 70 million people are handicapped all over the world. Unfortunately the number of handicapped people increase by the day due to many reasons that include road accidents and diseases like paralysis. According to this report the disability percentage is highly recorded on physically handicapped persons. If the person is handicapped then they are dependent on others for his/her day to day work like transport food etc... In India, around 12 million people are disabled out of which 41.88% are physically disabled. In a recent survey a large number of assistive and guidance systems are being developed for the disabled persons to make their life less complicated. A control system is being developed that would get opted with people with various disabilities. The old Traditional machines are less complicated compared with the newly developed machines.[6] The aim of this project is to develop a wheelchair that operates automatically by moving in all possible directions using voice and gesture provided by the smartphones [2]. The traditional wheelchair have some extent of limitation in content to flexibility, size and limited functions.A wheelchair is fitted with obstacle sensors, accelerometer sensors, and motors under smartphone, to help the driver achieve independent mobility.By just tilting the smart phone in any of the four directions the user can make the wheelchair move in that particular direction. The obstacle sensor takes over the responsibility of steering and avoiding objects until the user is able to handle the job. To enable the system work efficiently and to be highly interactive with the system the work is based on previous research [7]. The accelerometer sensor helps detect the fall of the user and send error and emergency signals to their respective caretakers. This approach allows the user to use human voice, gesture and one smartphone and sync that with the movement of the wheelchair to provide the user with most comfort. In order to facilitate the quality of life for disabled people and to make the ease of use in to their working worlds, the evolution of technology is take advantage of. [2]The wheelchair is equipped with voice and gesture algorithms, So that the disabled persons who is unable to walk, can drive the smart chair using the gesture movements and voice commands in the smartphone. The core part is by using an accelerometer and GPS sensor by which a parameter value is detected and fall of a person is detected and an alert is made to the caretaker. The caretaker can also monitor the person in a timely basis by the GPS sensor.

2. PROPOSED SYSTEM

In the proposed model we have a controlled movement of the wheel chair using voice and gesture recognition through a smart phone.The system is controlled by a PIC micro controller which also interfaced with the IR, GPS, Accelerometer and a cameramodule.The DC motors are attached to the wheels of the wheelchair and hence rotation of motor direction of wheelchair will be easily controlled. Motors are interfaced with micro controller using motor drivers. The PIC micro controller is interfaced with smart phone through Bluetooth controller, depending on the user voice or gesture operation is done.The Accelerometer sensor in the phone is made use for the implementation of the fall detection in the smart wheelchair.

The sensor when triggered by an axis change of 90°, there would be an immediate reaction from the controller and an alert is made to the chartaker

In this project, PIC microcontroller and Bluetooth module are communicating over 9800bps via UART. The module works over a 3.5V power supply prototyped in a SMD package The RX pin of microcontroller is used to send and receive data to the module in the profile. This is useful in making the device Bluetooth compatible. Micro Electronic Mechanical Systems(MEMS) is a combination of mechanical elements, sensors, and electronics on a single silicon substrate through

micro fabrication technology. The device is a accelerometer which is used to measure the accelerator forces. They are attached to the fingertip and back of the hand due to their size and weight.[9] The Project works on the implementation of acceleration provided by acceleration motor. It has a two axes acceleration sensor whose output is analog. By the use of the acceleration formula, the speed of the motor is calculated to decide to move in which direction. An Obstacle sensor is fitted to the micro-controller which detects the obstacle and stops as such. [9][10].HC-05 Bluetooth module has 4 pins namely 5V, GND, TX and RX pins. The power supply pins are the 5V and GND pin and the serial wireless communication are implemented by TX and RX pin. The module sends the information using TX pin and receives the information using RX pin.

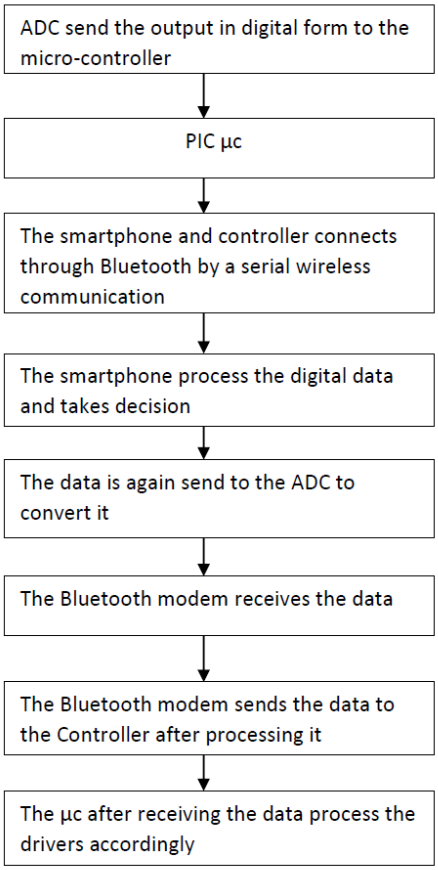

3. MATERIALS AND METHODS

A.Literature Survey:

(a) K.Sudheer, T.V Janardhana rao, Ch.Shridevi M.s Madhan Mohan(2012)[3] stated that the voice and speech powered electronic wheel chair using ARM uses speech and gesture combination. For speech it uses hidden markov model and for recognizing the hand angle MEMS sensor is used.

(b) Rakhi A. Kalautri , D.K Chitre (2013) [5] stated that the two axis accelerometer sensor is used for automatic gesture recogonition.The movement of the device is decided up on the calculation of the amount of tilt and output of tilt.

(C) Jinhua Zeng , Yaoru sun , Fang wang (2012) [4] stated that the medical assistance for the user is provided by a natural hand gesture system. It consist of a three dynamic components and five static hand gesture for hand gesture vocabulary in the system.

B.Archeitucture:

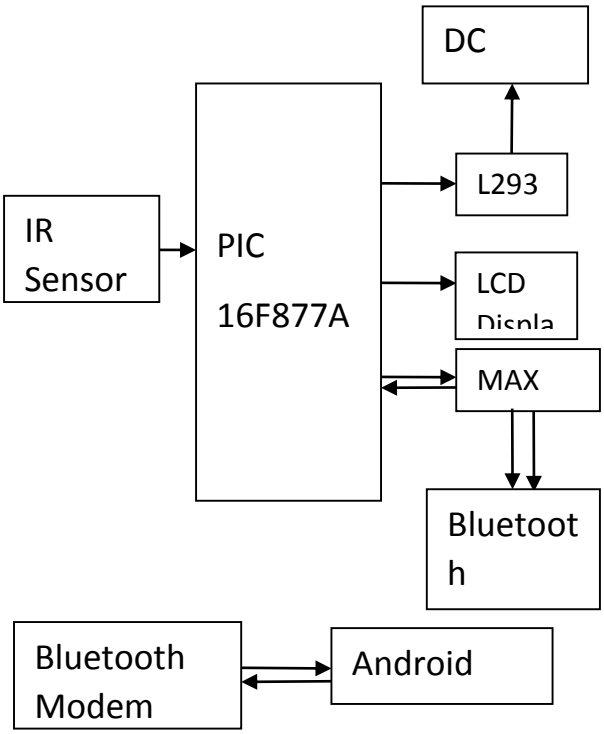

C.Module Description:

1. **Hardware Design**
2. **Mobile Application Design**
3. **Wheelchair Deployment**

The following are the proposed Modules for the work [8]:

Hardware Design:

In Hardware design, the microcontroller is designed with all the sensors attached. The sensors are categorized into obstacle detection sensor, fall detection sensor and real time sensing sensor. For obstacle section an IR sensor is used where the IR waves are being transmitted once the power supply is given. It reflects if an object is been detected and alerts in the smart phone.

The fall detection sensor is the accelerometer available in the smartphone. It operates in the sense that when there is a shift in

the axis of the smart phone over a range of 90º, it automatically alerts the caretakers. The real time sensing sensors is GPS sensor connected to the micro-controller. Its parameter value is detected which gives the latitude and longitude of the user.A range limiting feature is being designed in the controller board. This feature work in the way that the disabled person when crosses the threshold parameter set by the caretaker, an automatic alert is been set to pass to the caretaker about the movement. The caretaker can either deny or allow the user to move beyond that limit.

Mobile Application Design:

In Mobile Application design, the user interface for the control of the micro- controller is been designed. The Module is intervened by three phases. The phases are Touch screen, gesture and voice. The touch screen based is like a button control module. The interface is designed with touch screen buttons for movement of the wheel chair in all possible directions.The second phase is gesture based control, in which the Smart phone's actions are being used to move the wheelchair. The movement of the smartphone would provide a three axis parameter value, which is recorded and passed to the controller at a loop. The third phase is voice based control in which the user's real time voice is passed to the microcontroller for movement of the wheelchair. Here a hidden markov model algorithm is used for speech processing of data.The data received from the mobile phone is passed to the micro-controller. The controller and the smart phone is first paired with each other and are communicated in a serial way. The accelerometer available in the smartphone is used to detect the fall of a person and by alerting the caretaker.The range limiting value is being set by the smartphone in order to limit the disabled person not to move any further upon the request of the caretaker.

Wheelchair Deployment:

A model of wheelchair is developed in a miniature way. Two wheels are connected to a DC motor for its rotation. These rotational values are provided as an input to the controller. These rotational values are being controlled through the smartphone by using any of three phases of the interface that is been designed.The overall setup is connected to the controller through a serial communication Bluetooth module. The Bluetooth module is then connected to the smartphone and the wheelchair. The Bluetooth module acts as both transmission and receiver device.

4. PERFORMANCE MEASURE

A.Experimental Setup:

In our experiment, the system is comprised of two models which interact with each other. The first part consist of a controller board which comprises of a Micro-Controller and the necessary sensor which are connected to the micro-controller board. The second part comprises of a Mobile Smart phone in which an Application is been developed to control the controller using a Bluetooth medium. The previous model consist of a WI-FI interface to control the controller, but Bluetooth interface is used because of cost efficient and quick response.

B.Experimental Result and Inference:

A Comparison experiment is conducted to validate whether the proposed algorithm is capable of dealing with various actions of the controller

(1) Touch-Based Control:

For every action issued from the phone, the controller responds According to the response is depicted in the graph

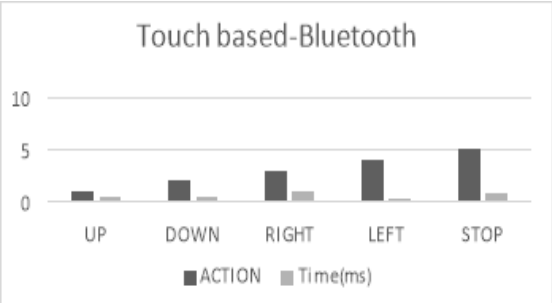

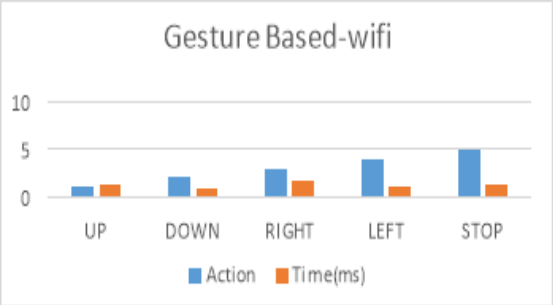

(2) Gesture-based Control:

For every gesture issued from the phone, the controller responds According to the response is depicted in the graph

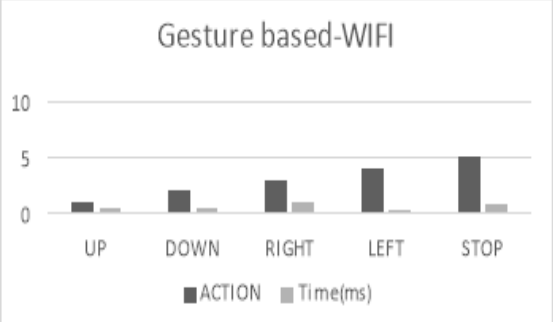

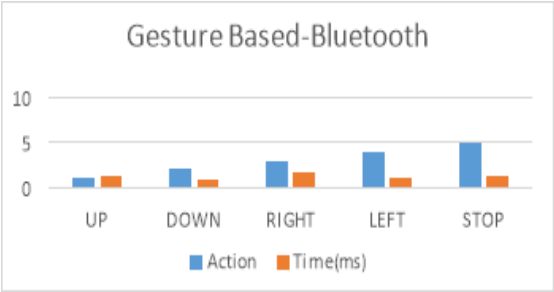

5. CONCLUSION AND FUTURE WORK

By using the proposed system, handicapped people would find it easier to move around the house or anywhere else without any external help. As the system use latest technologies the accuracy is increased. An IR sensor and camera module is used for obstacle detection and provide an alternative route.The efficiency of speech recognition can be increased by providing an intelligent NLP algorithm. An alternative approach for gesture recognition is to provide mind based sensors to move the wheel chair. Tongue operated assistive technology is possible to access to android phone applications using Bluetooth link.

REFERENCES

[1] Rajesh Kannan Megalingam, Ramesh Nammily Nair, Sai Manoj Prakhya,Automated Voice based Home Navigation System for the Elderly and the Physically Challenged", *Feb. 13~16, 2011 ICACT201, pp.*603

[2] P.Sutha, S. Prabhu, S. Manikandan,S. Venkateshkumar, A. Stephen paul.International Journal of Engineering and Innovative Technology (IJEIT) Volume 2, Issue 12, June 2013

[3] K. Sudheer, T.V.Janardhana rao, CH. Srhidevi, M.S.Madhan Mohan, Voice and Gesture Based Electric-Powered Wheelchair Using ARM 2278-5841,Vol 1, Issue 6, November 2012.

[4] Jinhua Zeng, Yaoru Sun, and Fang Wang, A natural hand gesture system for intelligent human-computer interaction and medical-assistance, 978-0-7695-4860-9/12 $26.00 © 2012 IEEE DOI10.1109/GCIS.2012.60

[5] "Automatic Wheel Chair by Gesture Recognition" by Rakhi A. Kalantri, D.K. Chitre. ISSN: 2249 – 8958, Volume-2, Issue-6, August 2013

[6] Masato Nishimori, Takeshi Saitoh and Ryosuke Konishi, "Voice controlled intelligent wheelchair,"

[7] Moon, M. Lee, J. Chu, and M. Mun, "Wearable EMG-based HCI for Electric-Powered Wheelchair Users with Motor Disabilities," Proc. of the 2005 IEEE Int. Conf. on Robotics and Automation, pp. 2649-2654, 2005.

[8] R. Simpson, D. Poirot, and M. F. Baxter. Evaluation of the Hephaestus smart wheelchair system. In Intemational Conference on Rehabilitation Robotics, 1999